ACE Group

Nitric Acid Concentration Plant 35,000TPY

Overview

The fertilizer facility comprises a shutdown ammonia plant, a nitric acid plant, a nitric acid concentration plant which also produces Nitrogen peroxide and a technical ammonia nitrate plant.

The nitric acid concentration plant has a capacity of 35,000 T/yr.

The last major turnaround on the plant was in 2015.

The plant is controlled using an Emerson Delta V DCS system

There are some spares available with the plant.

There is good hard copy documentation available for the plant.

Cairo Rep. Office: ACE Group
3 Samir Mokhtar St., Ard Al Golf, Cairo – Egypt
Tel: 00202 26903100/200, Fax: 00202 26903500
E-mail: info@aceindustry.net
website: www.aceindustry.net

Process Description

63% nitric acid and nitrous gases from the nitric acid plant are fed to the A2300 column which operates at 30C and 2.5bar to oxidize more of the nitrous gases. The liquid nitric acid is sprayed into the column near the top with the gases entering at the bottom of the column. Liquid acid from the bottom of the column is fed to the B2370 drum. The nitrous gases off the top are fed to the bottom of each of the parallel post oxidation towers A2310A/B.

Nitrogen peroxide gases from within the process are also mixed with this stream to feed the post oxidation towers. These towers have 3 flooded trays. Concentrated nitric acid (98%) from within the process is fed to the top of each of the post oxidation towers to flow countercurrent with the nitrous gases. The post oxidation towers are of Uranus construction and operate at 30C and 2.5bar pressure. The liquid acid/water off the bottom of the towers passes to mix with acid from the A2300 tower in B2310 and is then fed to the B2370 drum. The remaining nitrous gases off the top of both post oxidation towers A2310A/B are each fed to the bottom of each absorption column A2320A/B. There are a total of 12 trays in each absorption column. 10 are cooled with chilled brine and 2 at the bottom with no cooling. The cooled trays are flooded. 90% nitric acid is fed to the top of each absorption column. The absorption columns operate at -15C and 2.5 bar pressure. The remaining nitrous gases off the top of the columns if fed back to the nitric acid plant.

The chilled brine is recycled with a buffer storage tank R23217 and chilled in 2 carbon steel heat exchangers E23212 and E23211 using liquid ammonia as the refrigerant. The gaseous ammonia is then fed to the ammonia heaters for the nitric acid plant.

The acid off the bottom of the columns at about 5C is fed through 2 heat exchangers E2364 and E2362 to preheat the acid feed and to cool the concentrated acid off the bottom of the distillation column. The distillation column D2340 is glass with 5 packed sections of ceramic packing in the 4 lower sections and raschig ring packing on the top packed section. The acid feed is fed to the middle of the column between the 2nd and 3rd packed section through a distribution plate. The column is fitted with a glass bottoms flash vessel and a steam heated reboiler E2342, which has tantalum tubes. Concentrated acid off the bottom of the flash vessel and the reboiler are fed to the E2362, E2363 and E2361 heat exchangers in series to cool the acid. Heat exchangers E2363 and E2361 are cooled with water. The cooled 98.5% concentrated nitric acid is fed to the B2360 drum. Part of this is pumped to the top of the post oxidation and absorption columns and the rest is pumped to the final product storage tanks R2393 and R2390.

Cairo Rep. Office: ACE Group
3 Samir Mokhtar St., Ard Al Golf, Cairo – Egypt
Tel: 00202 26903100/200, Fax: 00202 26903500
E-mail: info@aceindustry.net
website: www.aceindustry.net

The N2O4 rich gas off the top of the D2340 distillation column is cooled in E2341, part recycled to the column and the rest is fed to the E2351 heat exchanger, which is cooled with water and further cooled in the brine heat exchangers E2352 and E2353 to condense the nitrogen peroxide (N2O4)

The nitric acid, water and nitrogen peroxide mixture in drum B2370 is pumped to the top of each of the synthesis reactors K2380A/B. These operate at 20 bar pressure and a temperature range of 50 to 70C. O2 is fed to the bottom of the reactor. The reactor has an internal aluminum reactor vessel. The O2 is supplied from Air Liquid. The reactants are fed to the B2380 vessel to then be further distilled to separate the nitric acid and nitrogen peroxide. The glass column D2330 operates at about 0.1barg ate 18 C to 40C at the top of the column. It has a glass flash vessel S2330 and a reboiler E2332 (tantalum tubes) which is heated with steam. Concentrated nitric acid off the bottom of the flash column is cooled in the heat exchange train E2364, E2365, E2366 and sent to storage. The nitrogen peroxide gas off the top of the column is mixed with the peroxide from column D2340 and cooled in E2351 and further cooled in the brine refrigerated heat exchangers E2352 and E2353. The liquid N2O4 is then sent to storage with some recycled to the drum B2370.

Cairo Rep. Office: ACE Group
3 Samir Mokhtar St., Ard Al Golf, Cairo – Egypt
Tel: 00202 26903100/200, Fax: 00202 26903500
E-mail: info@aceindustry.net
website: www.aceindustry.net

ACE Group

Flow Sheet

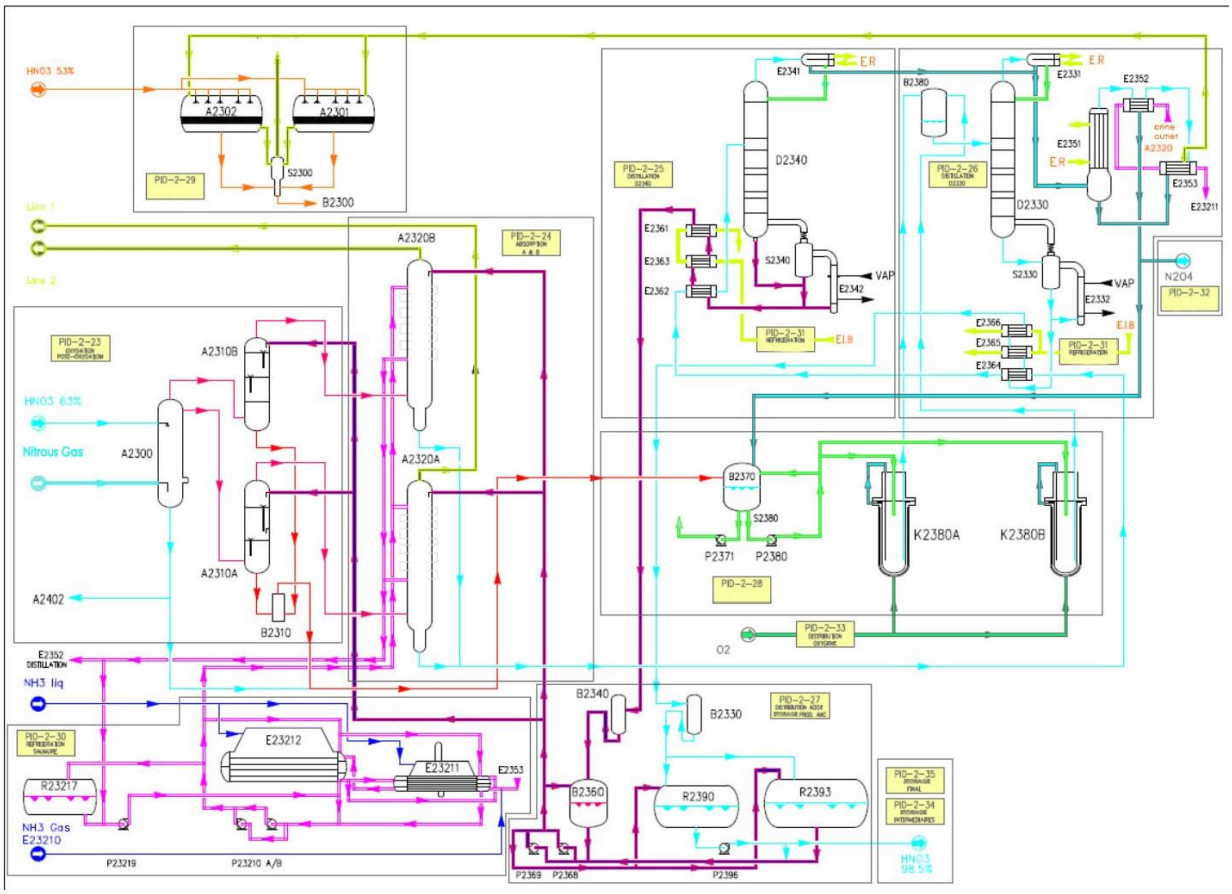

Cairo Rep. Office: ACE Group
3 Samir Mokhtar St., Ard Al Golf, Cairo – Egypt
Tel: 00202 26903100/200, Fax: 00202 26903500
E-mail: info@aceindustry.net
website: www.aceindustry.net

ACE Group

Cairo Rep. Office: ACE Group
3 Samir Mokhtar St., Ard Al Golf, Cairo – Egypt
Tel: 00202 26903100/200, Fax: 00202 26903500
E-mail: info@aceindustry.net
website: www.aceindustry.net